SECTION : 9D

WIPERS/WASHER SYSTEMS

CAUTION : Disconnect the negative battery cable before removing or installing any electrical unit or when a tool or equipment could easily come in contact with exposed electrical terminals. Disconnecting this cable will help prevent personal injury and damage to the vehicle. The ignition must also be in LOCK unless otherwise noted.

TABLE OF CONTENTS

SPECIFICATIONS

FASTENER TIGHTENING SPECIFICATIONS

Application	N•m	Lb–Ft	Lb–In
Front Wheel Well Splash Shield Bolts	1.5	–	13
Washer Fluid Reservoir Bolts	8	–	71
Wiper Arm Linkage Nut	5	–	44
Wiper Arm Nut	11	–	97
Wiper Motor Bolts	8	–	71

SCHEMATIC AND ROUTING DIAGRAMS

WIPERS AND WASHER SYSTEM (NOTCHBACK)

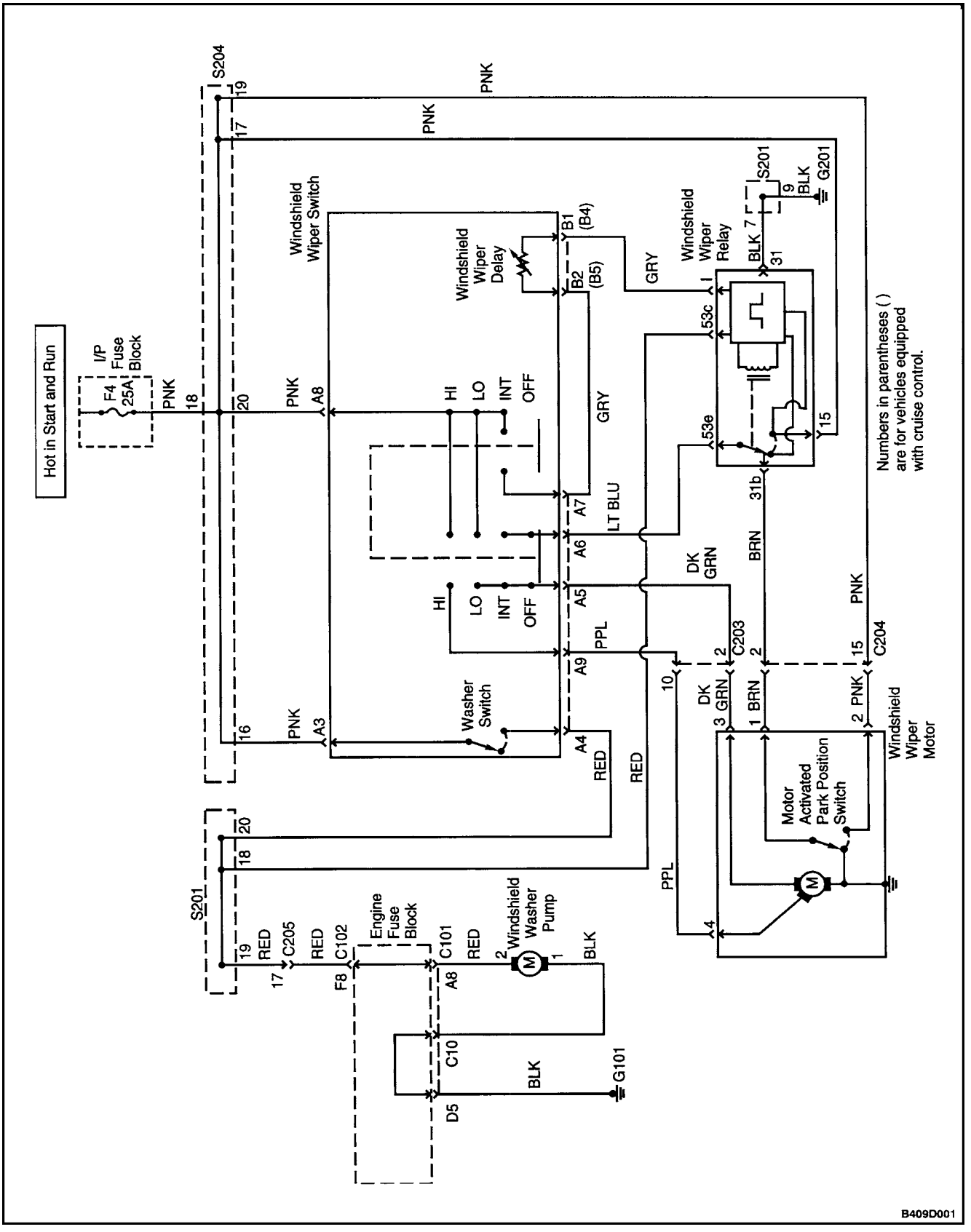

WIPERS AND WASHER SYSTEM (HATCHBACK)

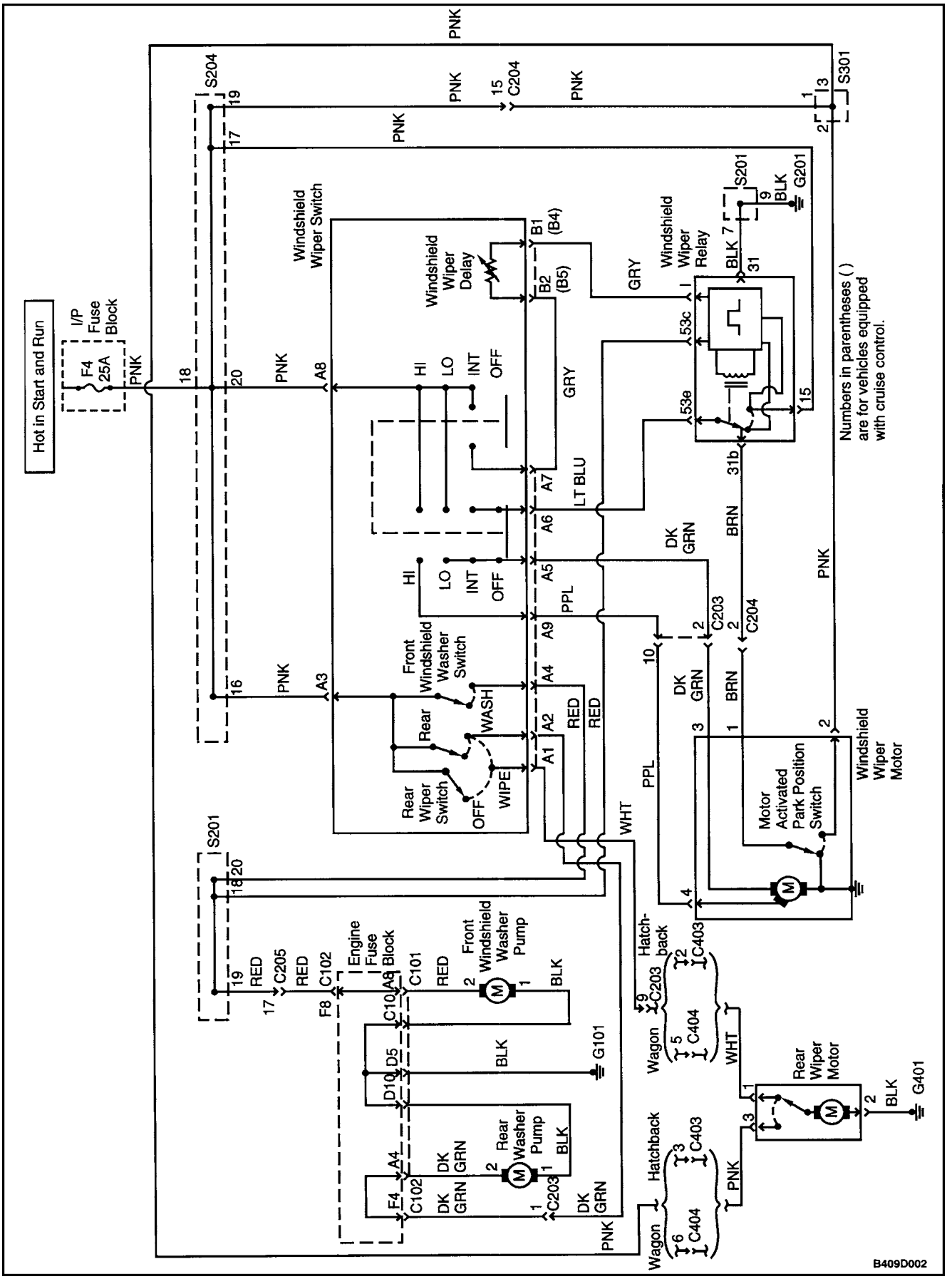

DIAGNOSIS

WINDSHIELD WIPERS

Windshield Wipers Do Not Work At Any Speed

Step	Action	Value(s)	Yes	No
1	Check fuse F4. Is fuse F4 blown?		Go to *Step 2*	Go to *Step 3*
2	1. Check for a short circuit and repair it, if necessary. 2. Replace the fuse. Is the repair complete?		System OK	
3	Check the voltage at fuse F4. Is the voltage equal to the specified value?	11–14 v	Go to *Step 5*	Go to *Step 4*
4	Repair the open power supply circuit to fuse F4. Is the repair complete?		System OK	
5	1. Disconnect the wiper motor connector. 2. Turn the ignition ON. 3. Turn the wiper switch to HI. 4. Check the voltage at the wiper motor connector terminal 6. Is the voltage equal to the specified value?	11–14 v	Go to *Step 6*	Go to *Step 7*
6	Replace the wiper motor. Is the repair complete?		System OK	
7	1. The wiper switch is still disconnected. 2. Turn the ignition ON. 3. Check for battery voltage at the wiper switch connector terminal A8. Is the voltage equal to the specified value?	11–14 v	Go to *Step 9*	Go to *Step 8*
8	Repair the open circuit between the wiper switch connector terminal A8 and fuse F4. Is the repair complete?		System OK	
9	1. The wiper switch is still disconnected. 2. Turn the wiper switch to HI. 3. Use an ohmmeter to check for continuity between wiper switch terminal A8 and A9. Does the ohmmeter indicate the specified value?	≈ 0 Ω	Go to *Step 11*	Go to *Step 10*
10	Replace the wiper switch. Is the repair complete?		System OK	
11	Repair the open circuit between the wiper switch and the wiper motor. Is the repair complete?		System OK	

Wipers Do Not Work On HI Speed, LO Speed OK

Step	Action	Value(s)	Yes	No
1	1. Turn the ignition ON. 2. Turn the wiper switch to HI. 3. Check the voltage at the wiper motor connector terminal 4. Is voltage equal to the specified value?	11–14 v	Go to *Step 2*	Go to *Step 3*
2	Replace the wiper motor. Is the repair complete?		System OK	
3	1. Disconnect the wiper switch. 2. Turn the wiper switch to HI. 3. Use an ohmmeter to check for continuity between wiper switch terminal A8 and A9. Does the ohmmeter indicate the specified value?	≈ 0 Ω	Go to *Step 5*	Go to *Step 4*
4	Replace the wiper switch. Is the repair complete?		System OK	
5	Repair the open circuit between wiper switch connector terminal A9 and wiper motor connector terminal 4. Is the repair complete?		System OK	

Wipers Do Not Work On LO Speed, HI Speed OK

Step	Action	Value(s)	Yes	No
1	1. Turn the ignition ON. 2. Turn the wiper switch to LO. 3. Check the voltage at the wiper motor connector, terminal 3. Is the voltage equal to the specified value?	11–14 v	Go to *Step 2*	Go to *Step 3*
2	Replace the wiper motor. Is the repair complete?		System OK	
3	1. Disconnect the wiper switch. 2. Turn wiper switch to LO. 3. Use an ohmmeter to check for continuity between wiper switch terminal A8 and A5. Does the ohmmeter indicate the specified value?	≈ 0 Ω	Go to *Step 5*	Go to *Step 4*
4	Replace the wiper switch. Is the repair complete?		System OK	
5	Repair the open circuit between wiper switch connector terminal A5 and wiper motor connector terminal 3. Is the repair complete?		System OK	

Wipers Do Not Work On Intermittent (INT), Other Speeds OK

Step	Action	Value(s)	Yes	No
1	1. Turn the ignition ON. 2. Use a voltmeter to test the voltage at wiper relay connector terminal 15. Is voltage equal to the specified value?	11–14 v	Go to *Step 3*	Go to *Step 2*
2	Repair the open circuit between the wiper relay connector terminal 15 and fuse F4. Is the repair complete?		System OK	
3	1. Turn the ignition on. 2. Turn the wiper switch to INT. 3. Check the voltage at wiper relay connector terminal I. Does the voltmeter indicate a voltage equal to the specified value?	11–14 v	Go to *Step 7*	Go to *Step 4*
4	Check for an open circuit between wiper switch connector terminal A7 and wiper relay connector terminal I. Is there an open circuit?		Go to *Step 6*	Go to *Step 5*
5	Replace the wiper switch. Is the repair complete?		System OK	
6	Repair the open circuit between wiper switch connector terminal A7 and wiper relay connector terminal I. Is the repair complete?		System OK	
7	1. Turn the ignition on. 2. Turn the wiper switch to INT. 3. Check for pulsing voltage at wiper switch connector terminal A6. Does the voltmeter indicate a pulsating voltage equal to the specified value?	11–14 v	Go to *Step 11*	Go to *Step 8*
8	Using an ohmmeter, check the resistance between ground and the wiper relay connector terminal 31. Is resistance equal to the specified value?	≈ 0 Ω	Go to *Step 10*	Go to *Step 9*
9	Repair the open ground circuit. Is the repair complete?		System OK	
10	Replace the wiper relay. Is the repair complete?		System OK	
11	1. Ignition ON. 2. Turn the wiper switch to INT. 3. Backprobe to check the voltage at the wiper switch connector terminal A5. Does the voltmeter indicate a pulsating voltage equal to the specified value?	11–14 v	Go to *Step 12*	Go to *Step 13*
12	Replace the wiper relay. Is the repair complete?		System OK	
13	Repair the open circuit between the wiper switch and the wiper relay. Is the repair complete?		System OK	

Windshield Wipers Do Not Return To Park Position

Step	Action	Value(s)	Yes	No
1	1. Turn the ignition ON. 2. Check the voltage at the wiper motor connector terminal 2. Is the voltage equal to the specified value?	11–14 v	Go to *Step 3*	Go to *Step 2*
2	Repair the open circuit between the wiper motor connector terminal 2 and fuse F4. Is the repair complete?		System OK	
3	1. Turn the wiper switch to HI. 2. While turning the wiper switch OFF, check the voltage at the wiper motor connector terminal 1. Is the specified voltage indicated when the wiper switch is turned OFF?	11–14 v	Go to *Step 5*	Go to *Step 4*
4	Replace the wiper motor. Is there an open circuit?		System OK	
5	1. Disconnect the wiper relay. 2. Check continuity between wiper relay terminal 31b and 53e. Does the ohmmeter indicate the specified value?	≈ 0 Ω	Go to *Step 6*	Go to *Step 7*
6	Repair the open circuit between the wiper motor and the wiper relay. Is the repair complete?		System OK	
7	Replace the wiper relay. Is the repair complete?		System OK	

WINDSHIELD WASHER SYSTEM

Windshield Washer Inoperative, Wipers Work OK

Step	Action	Value(s)	Yes	No
1	Activate the windshield washer switch. Do the windshield wipers operate when the washer switch is activated?		Go to *Step 4*	Go to *Step 2*
2	1. Turn the ignition ON. 2. While activating the washer switch, test the voltage at windshield wiper switch connector terminal A4. Is voltage equal to the specified value?	11–14 v	Go to *Step 8*	Go to *Step 3*
3	Replace windshield wiper switch. Is the repair complete?		System OK	
4	Check the windshield washer fluid reservoir. Is there washer fluid in the fluid reservoir?		Go to *Step 6*	Go to *Step 5*
5	Fill the windshield washer fluid reservoir. Is the repair complete?		System OK	
6	Check the windshield washer hoses and nozzles. Are the windshield washer hoses and nozzles clogged or damaged?		Go to *Step 7*	Go to *Step 8*
7	Repair the washer hoses and nozzles. Is the repair complete?		System OK	
8	1. Turn the ignition ON. 2. With the windshield washer activated, test the voltage at the windshield washer pump. Is the voltage equal to the specified value?	11–14 v	Go to *Step 10*	Go to *Step 9*
9	Repair the open circuit between the windshield washer pump and the windshield wiper switch. Is the repair complete?		System OK	
10	Use an ohmmeter to measure resistance between ground and the windshield washer pump connector terminal 1. Is the resistance equal to the specified value?	$\approx 0\ \Omega$	Go to *Step 12*	Go to *Step 11*
11	Repair the windshield washer pump ground circuit. Is the repair complete?		System OK	
12	Replace the windshield washer pump. Is the repair complete?		System OK	

REAR WINDOW WIPER (HATCHBACK AND WAGON)

Diagnostic Aid

If the front wiper is operating correctly, it is not necessary to check the fuse or the power supply circuit. Begin the diagnostic check at *Step 5* of the table below.

Step	Action	Value(s)	Yes	No
1	Check fuse F4. Is fuse F4 blown?		Go to *Step 2*	Go to *Step 3*
2	1. Check for a short circuit and repair it, if necessary. 2. Replace the fuse. Is the repair complete?		System OK	
3	1. Turn the ignition ON. 2. Check the voltage at fuse F4. Is the specified voltage available at fuse F4?	11 – 14 v	Go to *Step 5*	Go to *Step 4*
4	Repair the open power supply circuit for fuse F4. Is the repair complete?		System OK	
5	1. Disconnect the rear window wiper motor electrical connector. 2. Turn the ignition ON. 3. Check the voltage at rear wiper motor connector terminal 3. Does the voltage equal the specified value?	11 – 14 v	Go to *Step 7*	Go to *Step 6*
6	Repair the open circuit between fuse F4 and rear window wiper motor connector terminal 3. Is the repair complete?		System OK	
7	With the rear window wiper still disconnected, use an ohmmeter to check continuity between rear wiper motor connector terminal 2 and ground. Does the ohmmeter indicate the specified value?	≈ 0 Ω	Go to *Step 9*	Go to *Step 8*
8	Repair the open ground circuit for the rear window wiper motor. Is the repair complete?		System OK	
9	1. Turn the ignition ON. 2. Turn the rear window wiper to ON. 3. Check the voltage at rear window wiper motor connector terminal 1. Does the voltmeter indicate the specified value?	11 – 14 v	Go to *Step 10*	Go to *Step 11*
10	Replace the rear window wiper motor. Is the repair complete?		System OK	
11	1. Disconnect the rear window wiper switch electrical connector. 2. Turn the ignition ON. 3. Check the voltage at wiper switch connector terminal A3 (PNK wire). Does the voltmeter indicate the specified value?	11 – 14 v	Go to *Step 13*	Go to *Step 12*
12	Repair the open circuit between fuse F4 and rear window wiper switch connector terminal A3. Is the repair complete?		System OK	

Step	Action	Value(s)	Yes	No
13	1. Connect an ohmmeter between terminals A1 and A3 of the rear window wiper switch. 2. Move the rear window wiper switch to the WIPE position. Does the ohmmeter indicate the specified value?	≈ 0 Ω	Go to *Step 14*	Go to *Step 15*
14	Repair the open circuit between terminal A1 of the rear window wiper connector (WHT wire) and the rear window wiper motor. Is the repair complete?		System OK	
15	Replace the rear window wiper switch. Is the repair complete?		System OK	

REAR WINDOW WASHER SYSTEM (HATCHBACK AND WAGON)

Step	Action	Value(s)	Yes	No
1	Check the washer fluid level. Is there fluid in the washer reservoir?		Go to *Step 3*	Go to *Step 2*
2	Fill the washer reservoir. Is the repair complete?		System OK	
3	Verify that the hoses are not obstructed or leaking. 1. Disconnect the washer hose. 2. Blow through the washer hose toward the reservoir and also toward the nozzle. Are the hoses obstructed or leaking?		Go to *Step 4*	Go to *Step 5*
4	Repair or replace the hoses. Is the repair complete?		System OK	
5	Check the function of the rear window wiper. Does the rear window wiper function correctly?		Go to *Step 7*	Go to *Step 6*
6	Repair the rear window wiper. Is the rear window wiper functioning correctly?		Go to *Step 7*	
7	1. Disconnect the electrical connector at the rear window washer pump. 2. Use an ohmmeter to check continuity between terminal 1 and ground. Does the ohmmeter indicate the specified value?	≈ 0 Ω	Go to *Step 9*	Go to *Step 8*
8	Repair the open or high–resistance ground connection. Is the repair complete?		System OK	
9	1. Turn the rear window washer ON. 2. Check the voltage at terminal 2 of the rear window washer pump connector (DK GRN wire). Is the voltage equal to the specified value?	11 – 14 v	Go to *Step 10*	Go to *Step 11*
10	Replace the rear window washer pump. Is the repair complete?		System OK	
11	1. Disconnect the rear window wiper switch. 2. Connect an ohmmeter between terminal A3 and terminal A2 of the rear window wiper switch. 3. Observe the ohmmeter when the switch is moved to the rear WASH position. Does the ohmmeter indicate the specified value?	≈ 0 Ω	Go to *Step 12*	Go to *Step 13*
12	Repair the open circuit between terminal A2 (DK GRN wire) of the rear window wiper switch connector and terminal 2 (DK GRN wire) of the rear window washer pump. Is the repair complete?		System OK	
13	Replace the rear window wiper switch. Is the repair complete?		System OK	

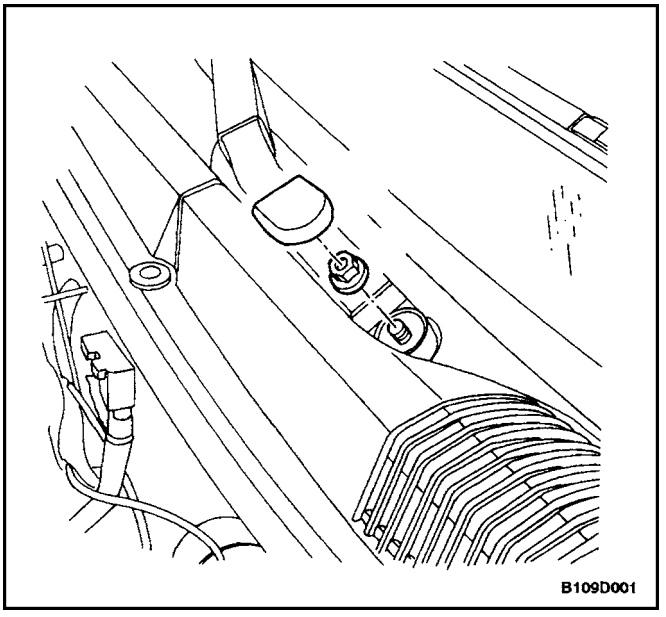

MAINTENANCE AND REPAIR

ON–VEHICLE SERVICE

WINDSHIELD WIPER ARM

(Left–Hand Drive Shown, Right–Hand Drive Similar)

Removal Procedure

1. Open the hood.
2. Remove the cap to reveal the wiper arm nut, if necessary.
3. Remove the nut from the wiper arm.
4. Pull the wiper arm off.

Installation Procedure

1. Install the wiper arm.

Notice : Dissimilar metals in direct contact with each other may corrode rapidly. Make sure to use the correct fasteners to prevent premature corrosion.

2. Secure the wiper arm with the nut.

   Tighten

   Tighten the wiper arm nut to 11 N•m (97 lb–in).
3. Install the wiper arm nut cap, if necessary.
4. Close the hood.

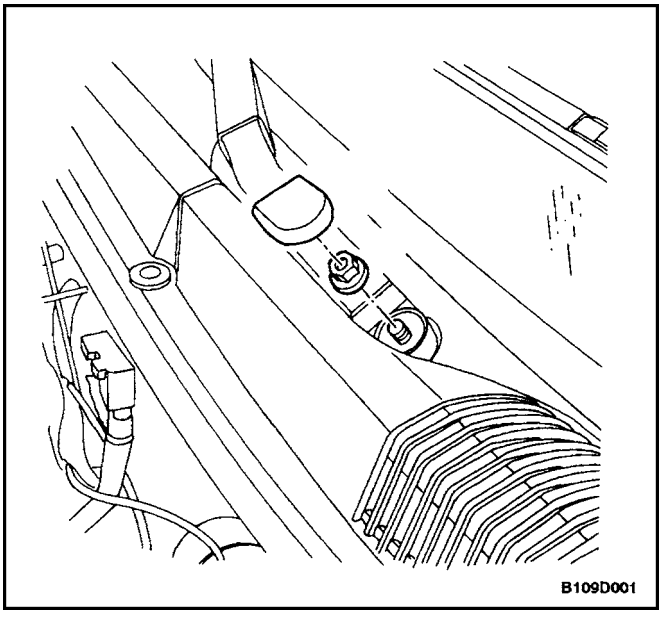

WINDSHIELD WIPER MOTOR

(Left–Hand Drive Shown, Right–Hand Drive Similar)

Removal Procedure

1. Disconnect the negative battery cable.
2. Remove the left–side portion of the cowl vent grille. Refer to *Section 9R, Body Front End.*
3. Remove the nut and the washer that secure the wiper arm linkage to the motor drive shaft.

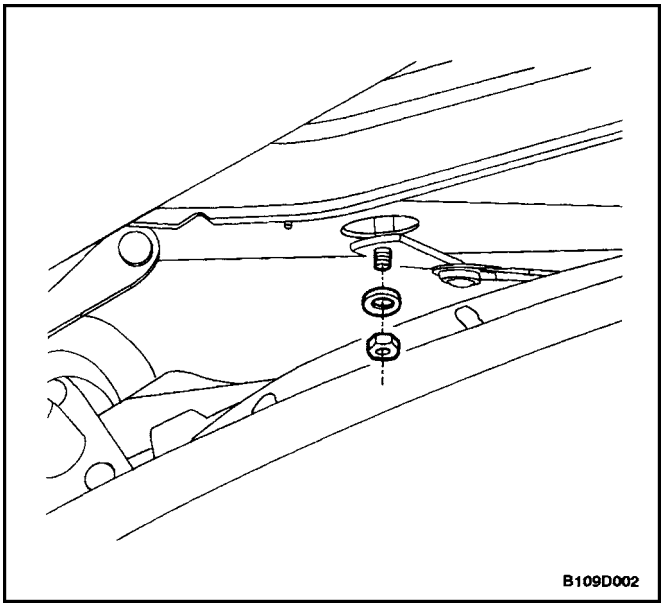

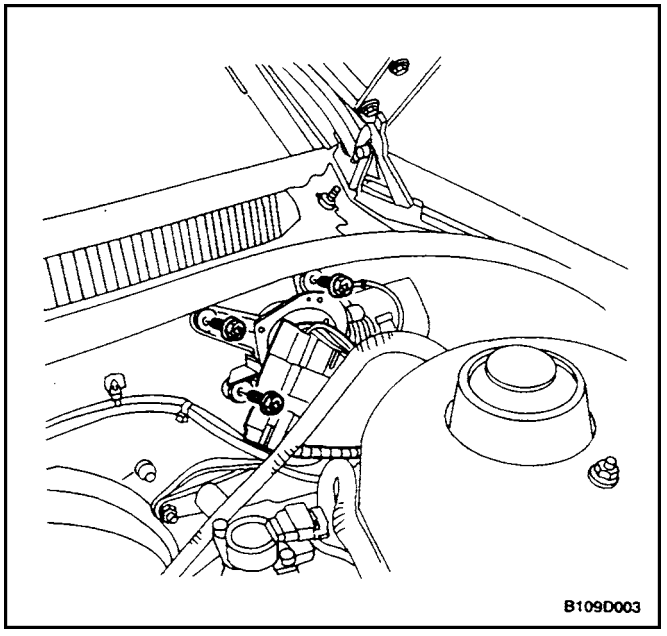

4. Pry the wiper arm linkage off the motor drive shaft.
5. Remove the nuts and reposition the engine coolant reservoir.
6. Disconnect the electrical connector.
7. Remove the bolts and the wiper motor.

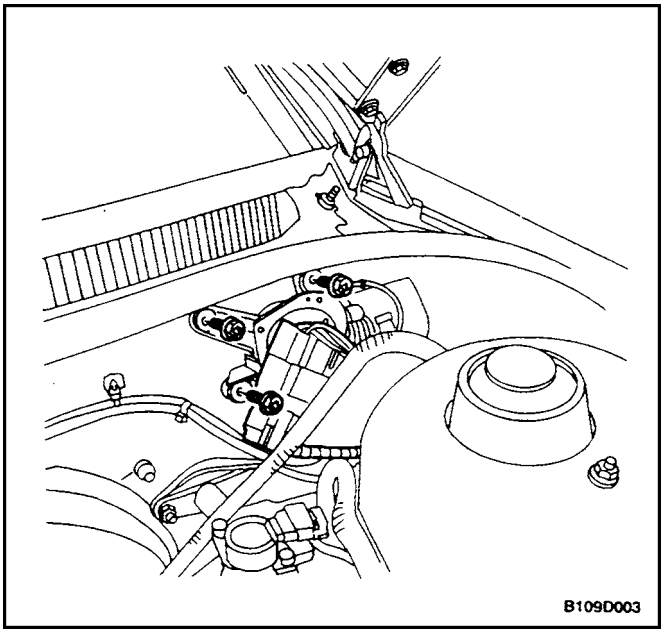

Installation Procedure

Notice : Dissimilar metals in direct contact with each other may corrode rapidly. Make sure to use the correct fasteners to prevent premature corrosion.

1. Install the wiper motor with the bolts.

   Tighten

   Tighten the wiper motor bolts to 8 N•m (71 lb–in).
2. Connect the electrical connector.

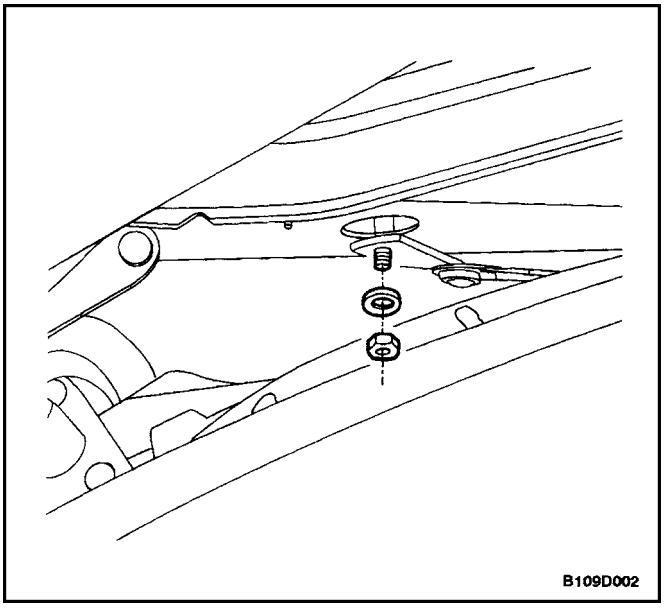

3. Press the wiper arm linkage onto the motor drive shaft.
4. Install the wiper arm linkage to the motor drive shaft with the washer and the nut.

   Tighten

   Tighten the wiper arm linkage nut to 5 N•m (44 lb–in).
5. Install the left side portion of the cowl vent grille. Refer to*Section 9R, Body Front End.*
6. Connect the negative battery cable.

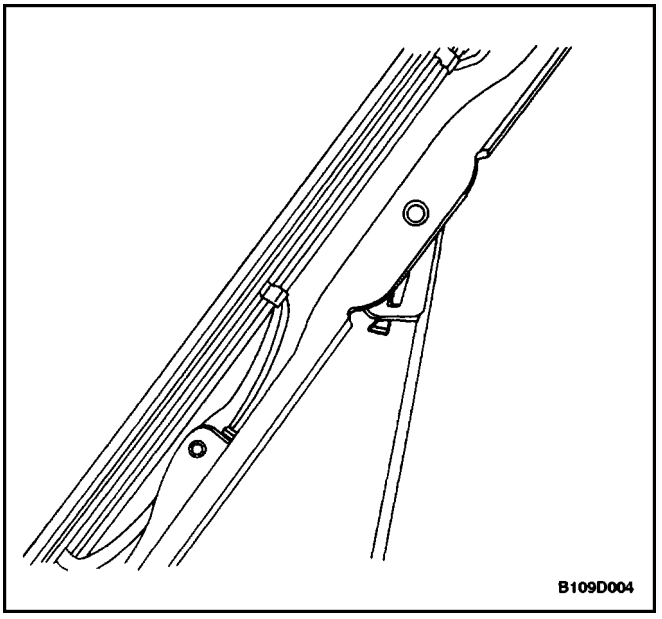

WINDSHIELD WIPER BLADE

(Typical)

Removal Procedure

1. Rotate the wiper blade on the arm.
2. While pressing the retainer clip, slide the wiper blade down the wiper arm and remove the blade.

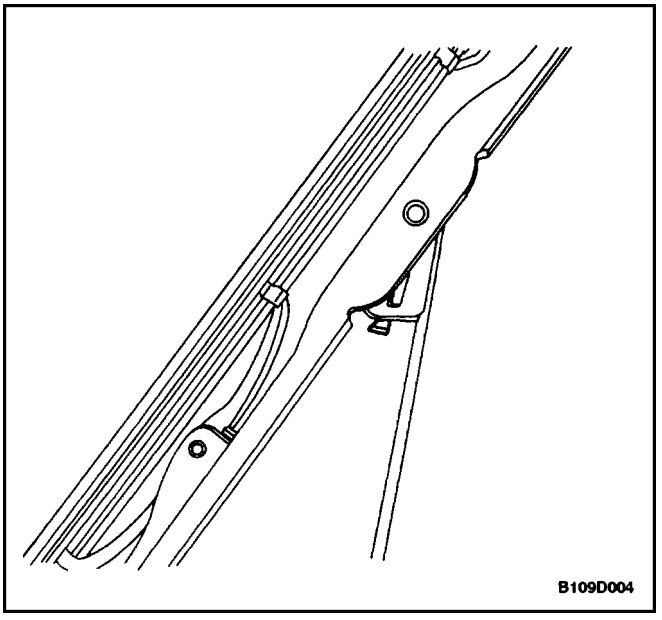

Installation Procedure

1. Install the wiper blade by sliding it onto the arm until the retainer clip engages.

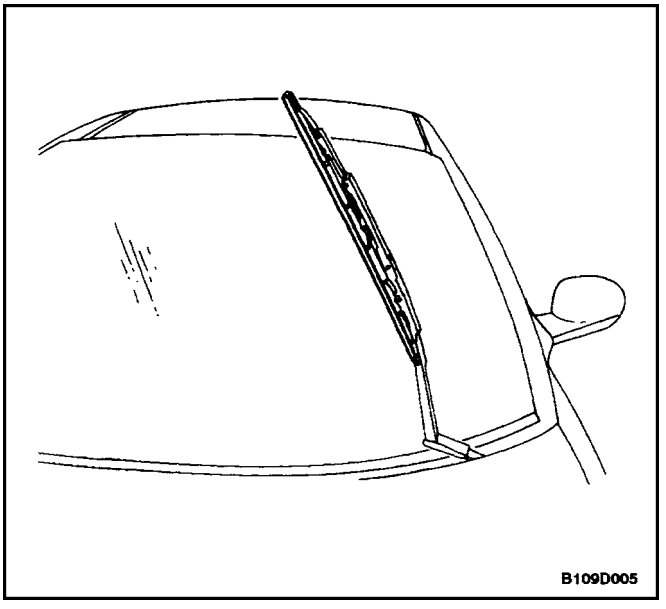

WINDSHIELD WIPER BLADE INSERT

(Front Shown, Rear Similar)

Removal Procedure

1. Slide the insert out of the wiper blade.

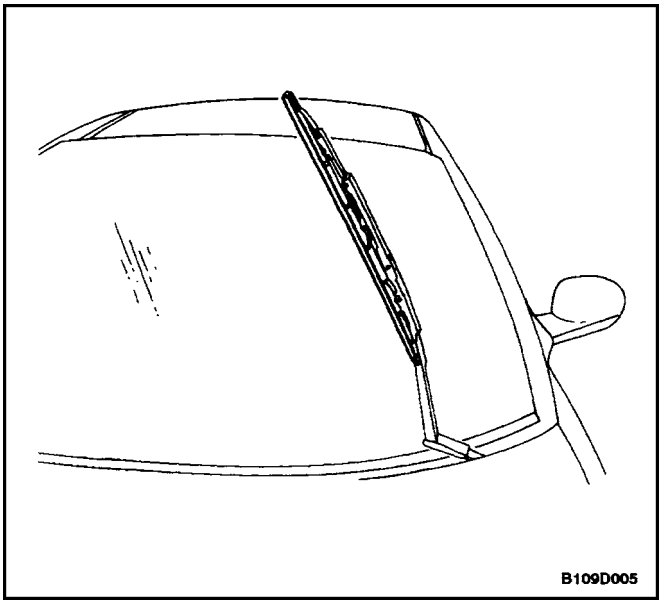

Installation Procedure

1. Slide the insert into the wiper blade.

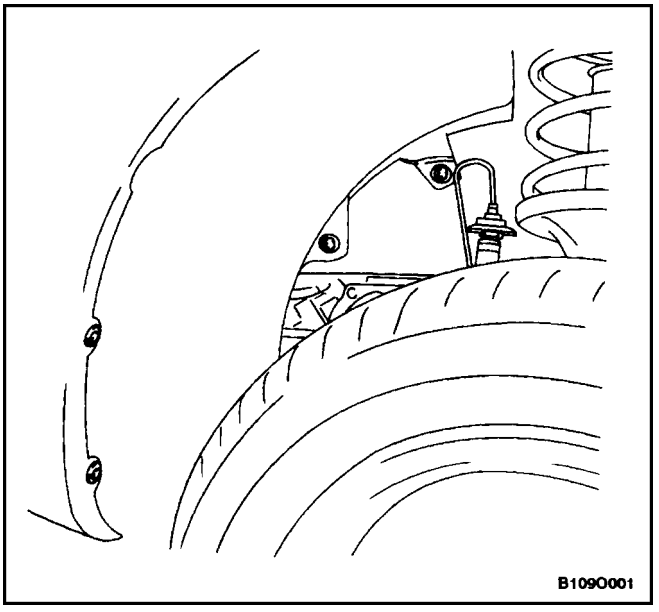

WINDSHIELD WASHER RESERVOIR (Typical)

Removal Procedure

1. Disconnect the negative battery cable.
2. Remove the front left wheel. Refer to *Section 2E, Tires and Wheels.*
3. Remove the bolts and the screws and the front wheel well splash shield.

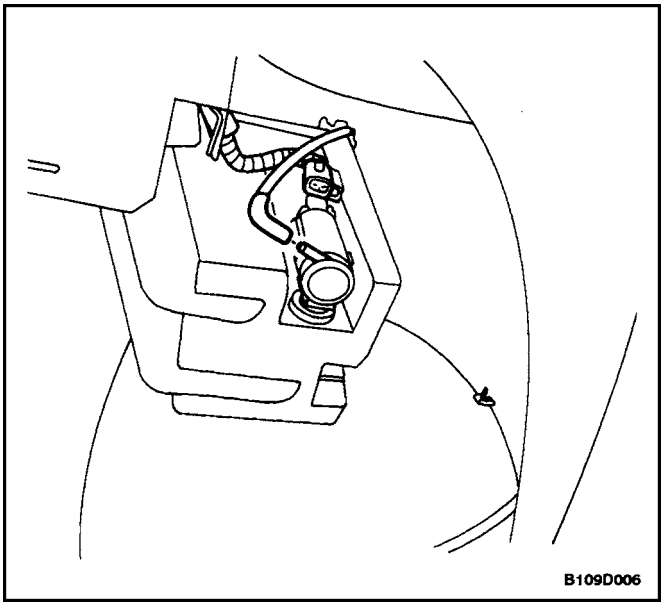

4. Disconnect the washer hose from the washer pump.
5. Disconnect the reservoir pump electrical connector.

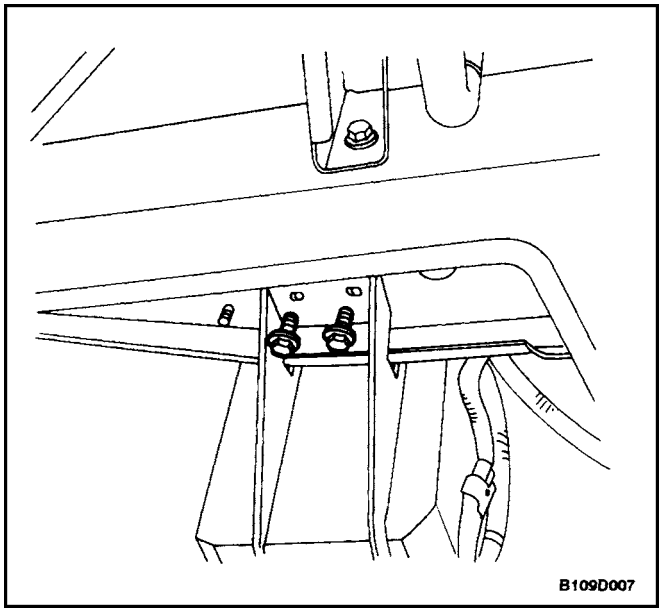

6. Remove the bolts and the reservoir.

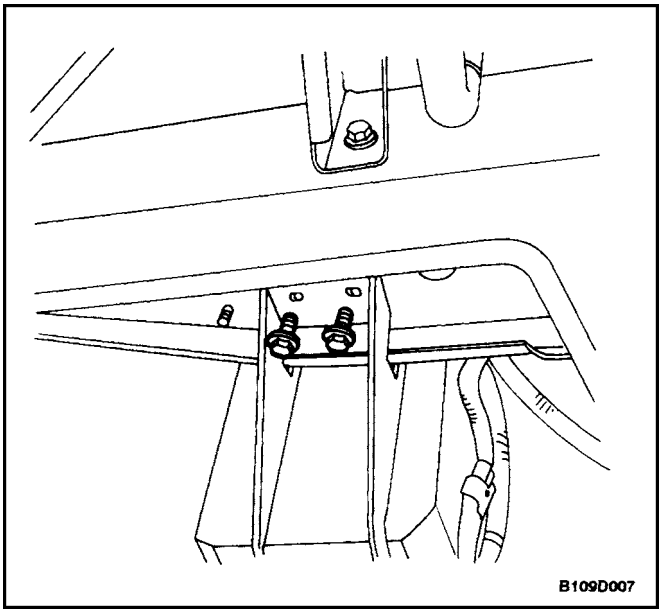

Installation Procedure

Notice : Dissimilar metals in direct contact with each other may corrode rapidly. Make sure to use the correct fasteners to prevent premature corrosion.

1. Install the reservoir with the bolts.

   Tighten

   Tighten the washer fluid reservoir bolts to 8 N•m (71 lb–in).

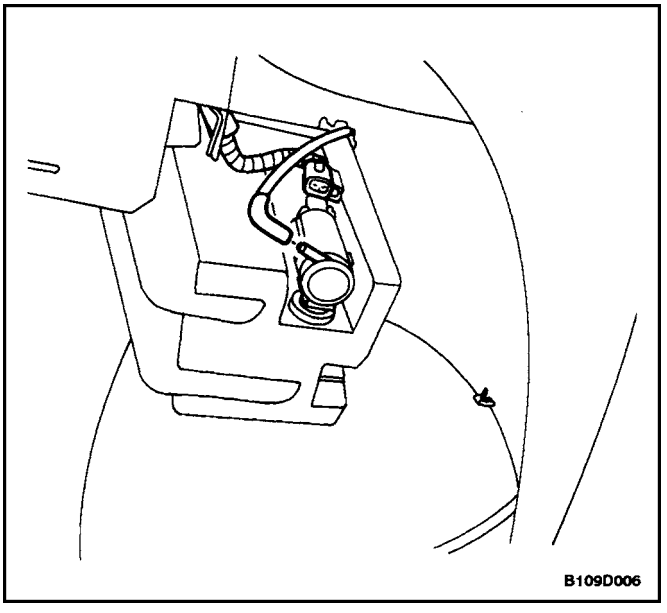

2. Connect the reservoir pump electrical connector.
3. Connect the washer hose to the washer pump.

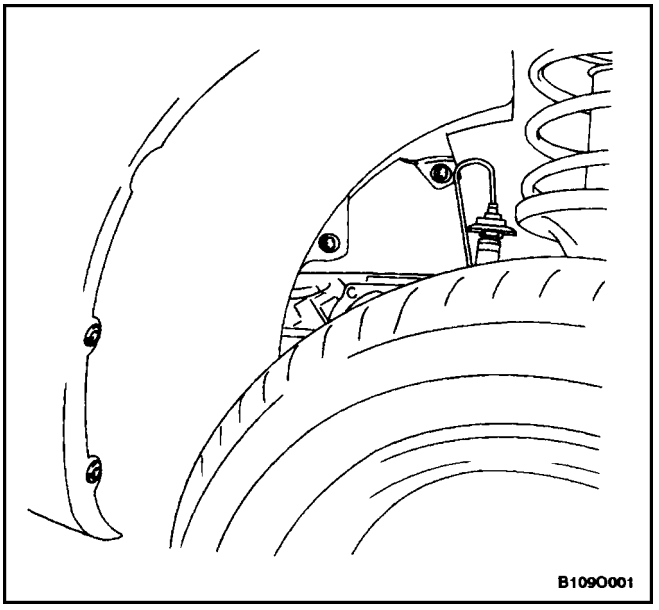

4. Install the front wheel well splash shield with the bolts and the screws.

   Tighten

   Tighten the front wheel well splash shield bolts to 1.5 N•m (13 lb–in).
5. Install the front left wheel. Refer to *Section 2E, Tires and Wheels.*
6. Connect the negative battery cable.

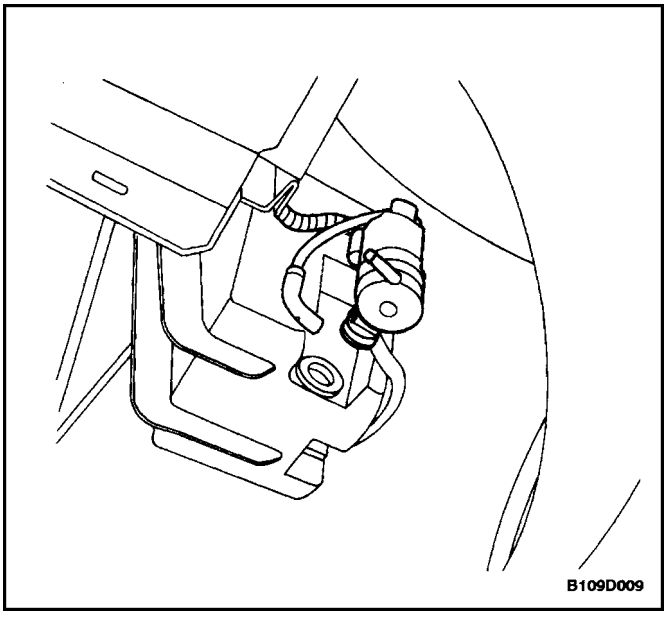

WINDSHIELD WASHER PUMP(S) (Typical)

Removal Procedure

1. Disconnect the negative battery cable.
2. Remove the front left wheel. Refer to *Section 2E, Tires and Wheels.*
3. Remove the bolts and the screws and the front wheel well splash shield.
4. Disconnect the electrical connector.
5. Disconnect the washer hose from the washer pump.
6. Remove the washer pump.

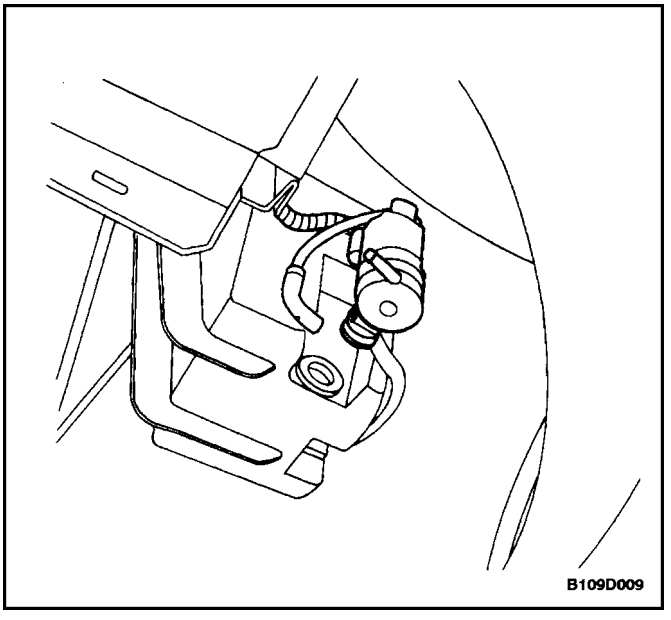

Installation Procedure

1. Install the washer pump.
2. Connect the washer hose to the washer pump.
3. Connect the electrical connector.

Notice : Dissimilar metals in direct contact with each other may corrode rapidly. Make sure to use the correct fasteners to prevent premature corrosion.

4. Install the front wheel well splash shield with the bolts and the screws.

   Tighten

   Tighten the front wheel well splash shield bolts to 1.5 N•m (13 lb–in).
5. Install the front left wheel. Refer to *Section 2E, Tires and Wheels.*
6. Connect the negative battery cable.

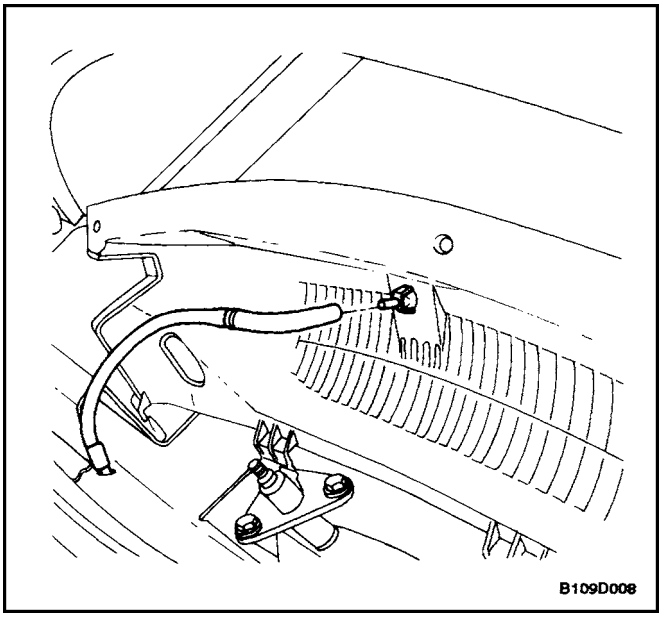

WINDSHIELD WASHER NOZZLES

Removal Procedure

1. Remove the cowl vent grille. Refer to *Section 9R, Body Front End.*
2. Disconnect the washer hose from the nozzle.
3. Remove the nozzle from the cowl vent grille.

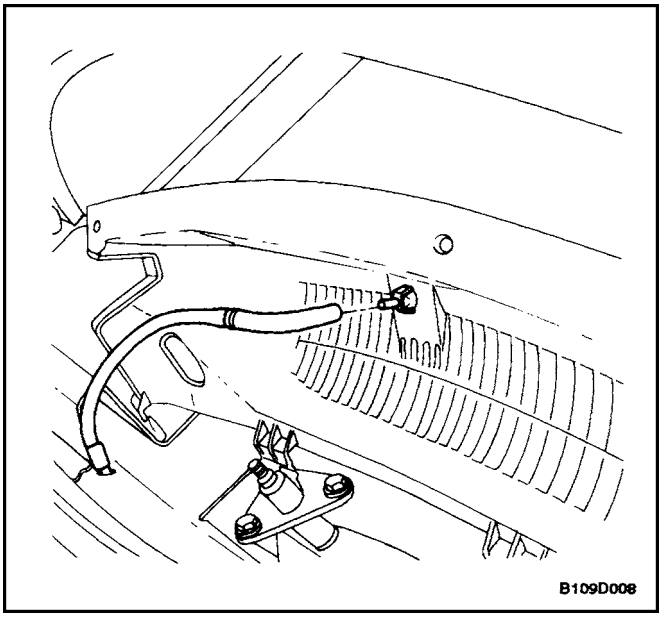

Installation Procedure

1. Install the nozzle onto the cowl vent grille.
2. Connect the washer hose to the nozzle.
3. Install the cowl vent grille. Refer to *Section 9R, Body Front End.*

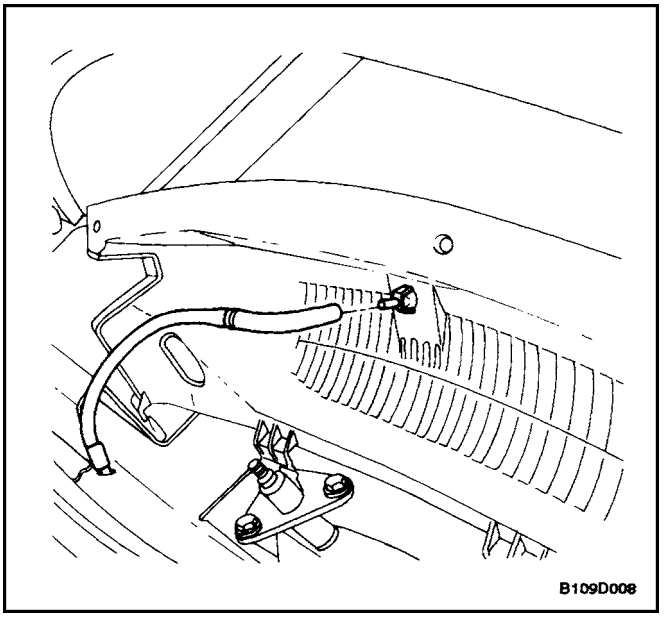

WINDSHIELD WASHER HOSES

(Typical)

Removal Procedure

1. Remove the cowl vent grille. Refer to *Section 9R, Body Front End.*
2. Disconnect the windshield washer hose from the washer nozzles.

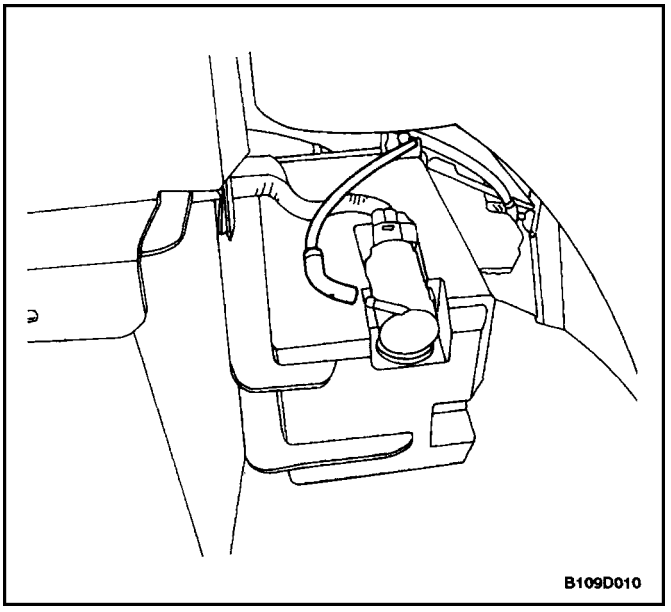

3. Remove the front left wheel. Refer to *Section 2E, Tires and Wheels.*
4. Remove the bolts and the screws and the front wheel well splash shield.
5. Disconnect the washer hose from the washer reservoir.
6. Remove the washer hose.

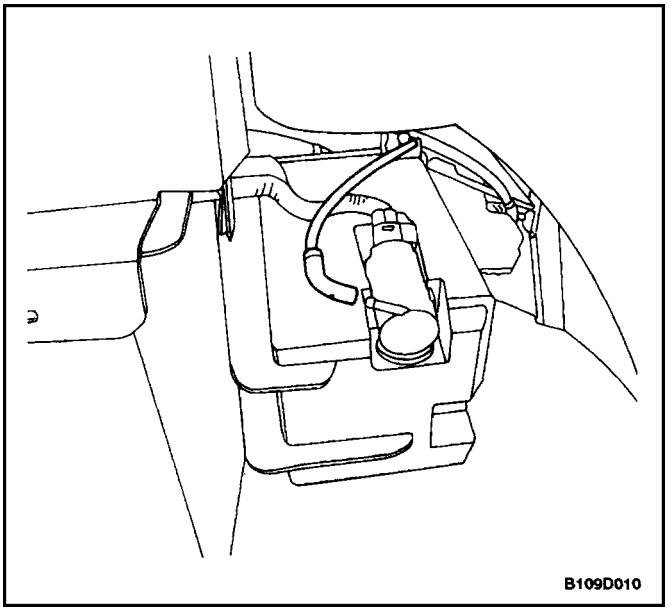

Installation Procedure

1. Install the washer hose.
2. Connect the washer hose to the washer pump.

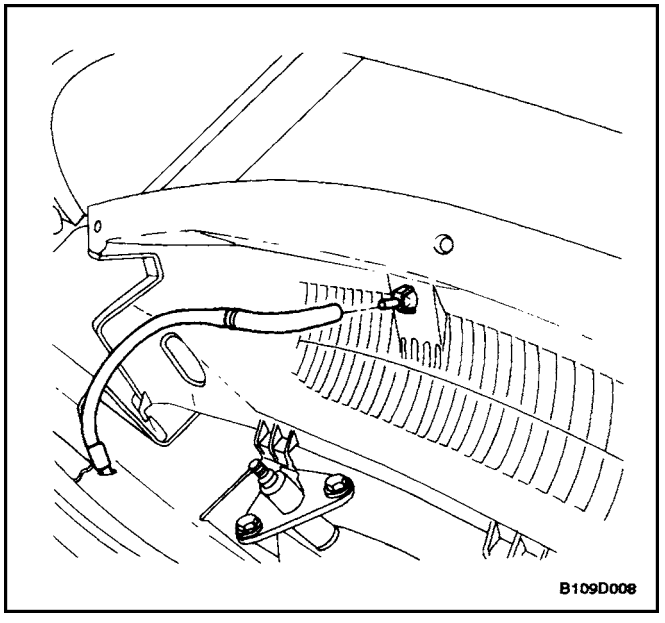

Notice : Dissimilar metals in direct contact with each other may corrode rapidly. Make sure to use the correct fasteners to prevent premature corrosion.

3. Install the front wheel well splash shield with the bolts and the screws.

   Tighten

   Tighten the front wheel well splash shield bolts to 1.5 N•m (13 lb–in).
4. Remove the front left wheel. Refer to *Section 2E, Tires and Wheels.*
5. Connect the windshield washer hose to the washer nozzles.
6. Install the cowl vent grille. Refer to *Section 9R, Body Front End.*

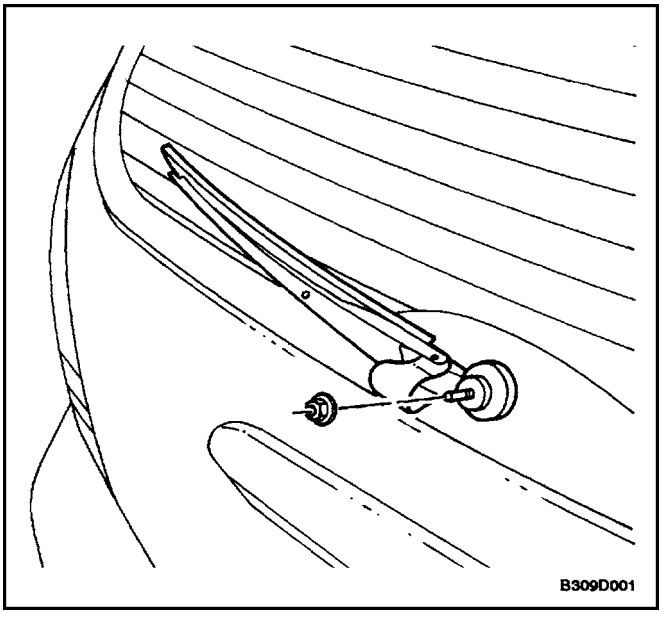

REAR WINDOW WIPER ARM

(Wagon Shown, Hatchback Similar)

Removal Procedure

1. Open the wiper arm access cap.
2. Remove the nut and the rear wiper arm.

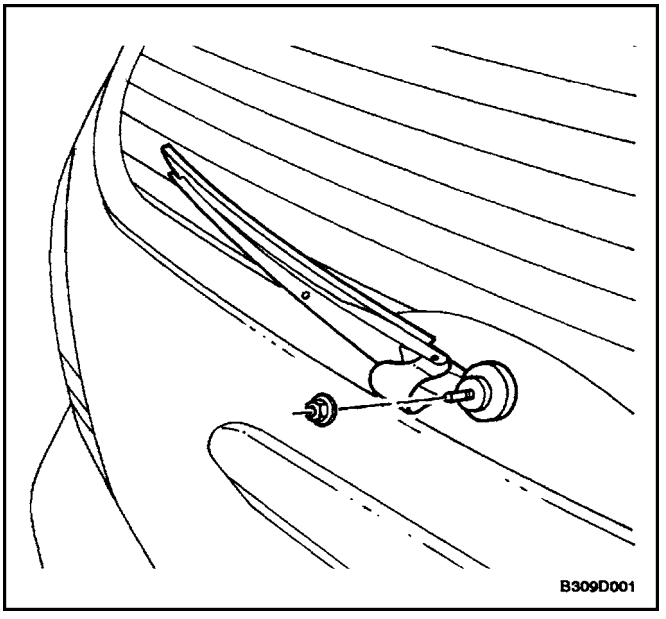

Installation Procedure

Notice : Dissimilar metals in direct contact with each other may corrode rapidly. Make sure to use the correct fasteners to prevent premature corrosion.

1. Install the rear wiper arm with the nut.

   Tighten

   Tighten the wiper arm nut to 11 N•m (97 lb–in).
2. Close the wiper arm access cap.

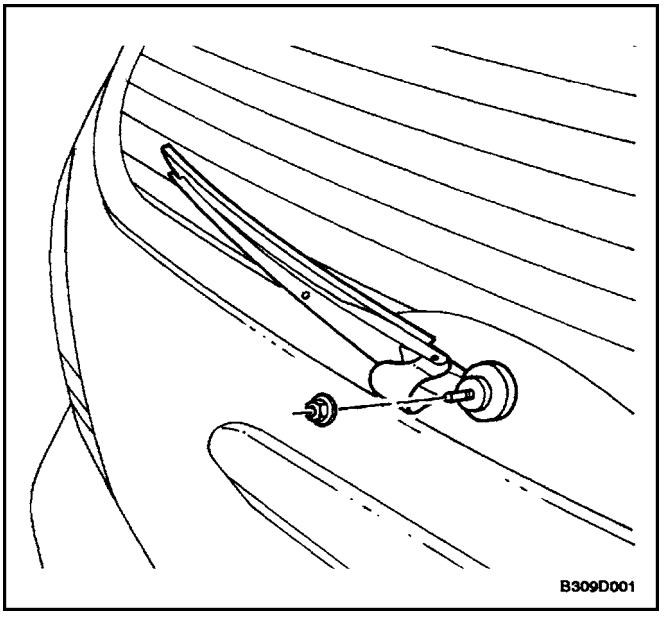

REAR WINDOW WIPER MOTOR (HATCHBACK)

Removal Procedure

1. Disconnect the negative battery cable.
2. Remove the rear window wiper arm. Refer to ”Rear Window Wiper Arm” in this section.
3. Remove the hatchback door lower garnish molding. Refer to *Section 9G, Interior Trim.*
4. Remove the bolts and the rear wiper motor.
5. Disconnect the electrical connector.

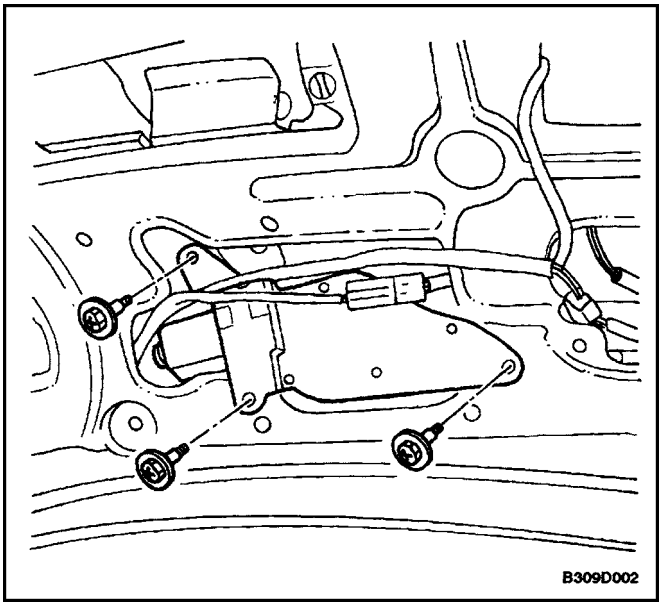

Installation Procedure

1. Connect the electrical connector.

Notice : Dissimilar metals in direct contact with each other may corrode rapidly. Make sure to use the correct fasteners to prevent premature corrosion.

2. Install the rear wiper motor with the bolts.

   Tighten

   Tighten the wiper motor bolts to 8 N•m (71 lb–in).
3. Install the hatchback door lower garnish molding. Refer to*Section 9G, Interior Trim.*
4. Install the rear window wiper arm. Refer to ”Rear Window Wiper Arm” in this section.
5. Close the wiper arm access cap.

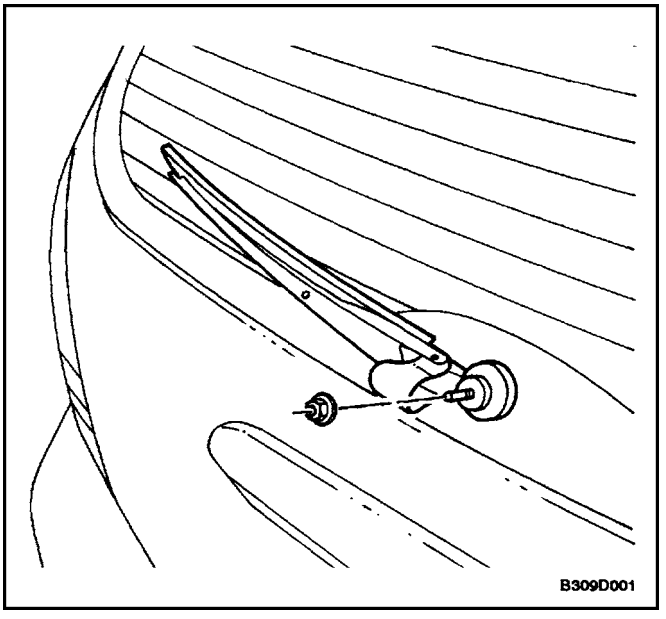

REAR WINDOW WIPER MOTOR (WAGON)

Removal Procedure

1. Disconnect the negative battery cable.
2. Remove the rear window wiper arm. Refer to ”Rear Window Wiper Arm” in this section.
3. Remove the wiper motor exterior retaining clip and nut from the tailgate.

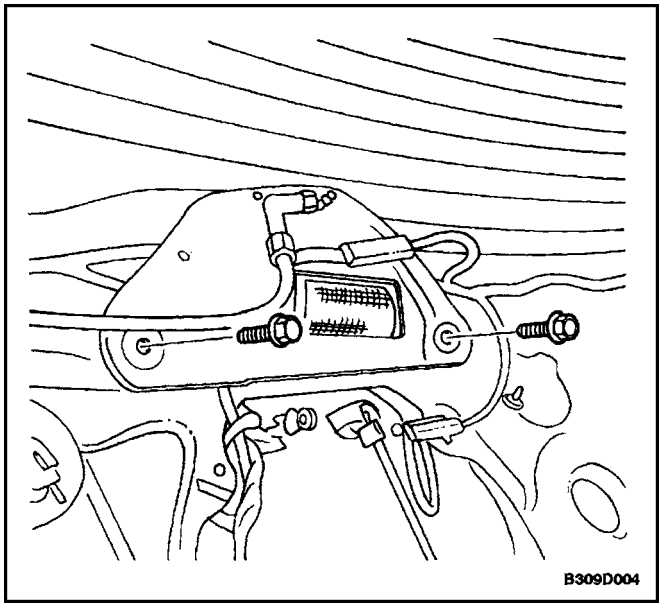

4. Remove the tailgate lower garnish molding.
5. Disconnect the electrical connector and the washer hose.
6. Remove the bolts and the rear wiper motor.

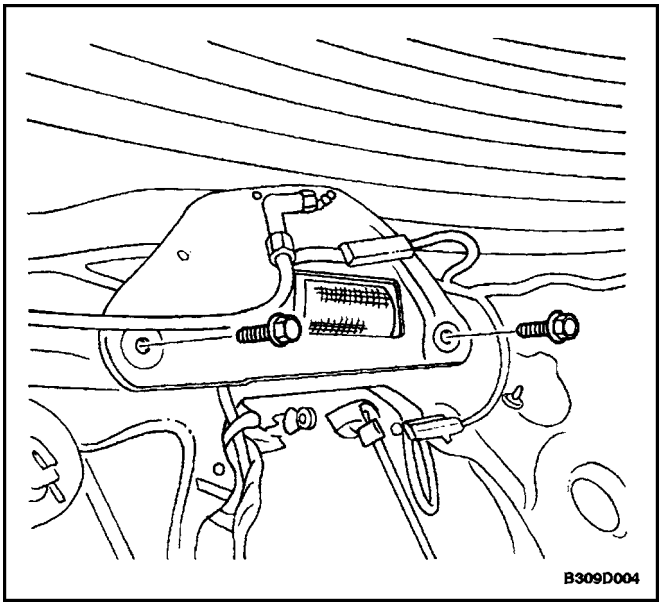

Installation Procedure

Notice : Dissimilar metals in direct contact with each other may corrode rapidly. Make sure to use the correct fasteners to prevent premature corrosion.

1. Install the rear wiper motor with the bolts.

   Tighten

   Tighten the wiper motor bolts to 8 N•m (71 lb–in).
2. Connect the electrical connector and the washer hose.

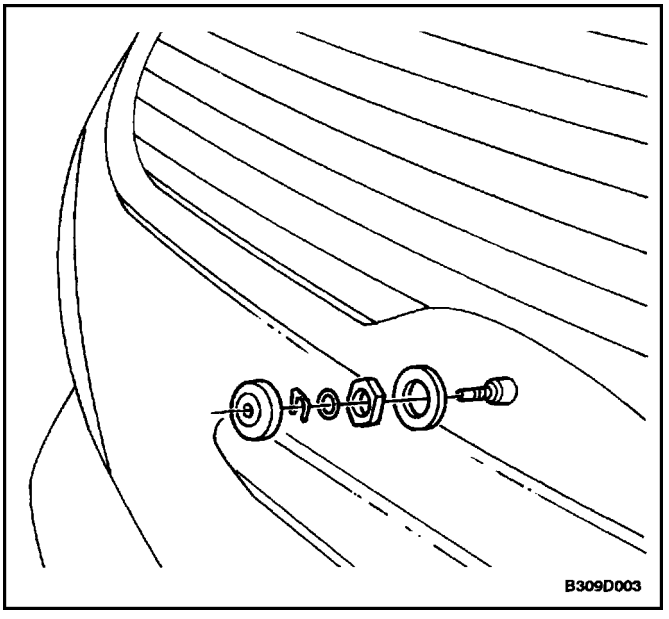

3. Install the tailgate lower garnish molding.
4. Install the wiper motor nut and exterior retaining clip to the tailgate.
5. Install the rear window wiper arm. Refer to ”Rear Window Wiper Arm” in this section.
6. Connect the negative battery cable.

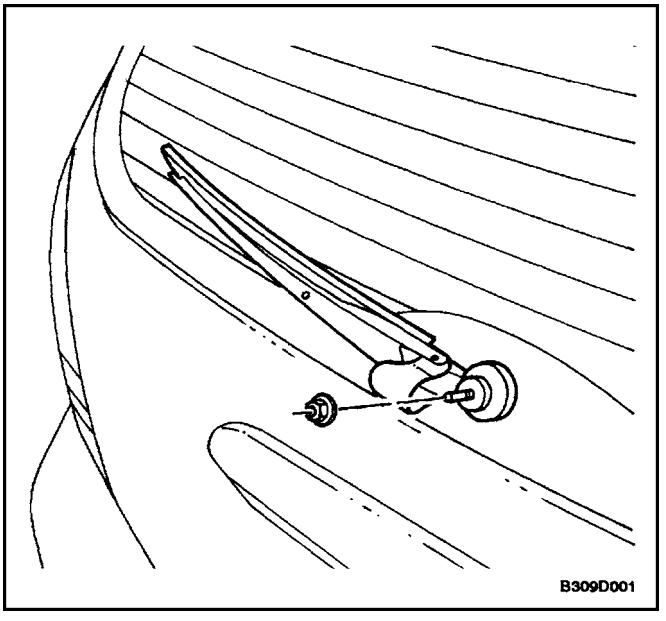

REAR WINDOW WASHER NOZZLE (HATCHBACK)

Removal Procedure

1. Remove the hatchback door upper garnish molding. Refer to *Section 9G, Interior Trim.*
2. Remove the washer hose from the nozzle.
3. Remove the nut and the washer nozzle.

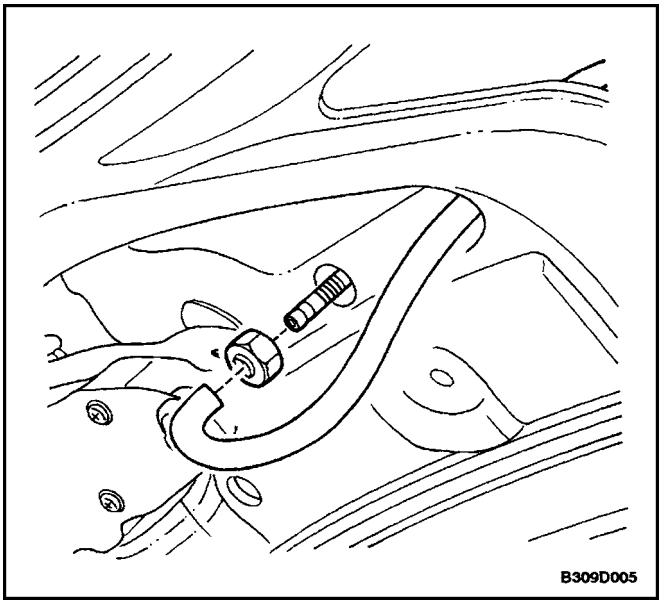

Installation Procedure

1. Install the washer nozzle with the nut.
2. Install the washer hose to the nozzle.
3. Install the hatchback door upper garnish molding. Refer to*Section 9G, Interior Trim.*

GENERAL DESCRIPTION AND SYSTEM OPERATION

WINDSHIELD WIPER SYSTEM

The windshield wiper system consists of a wiper motor, a linkage, a wiper arm and a blade, and a wiper/washer switch. The windshield wiper circuit incorporates a self-parking device which consists of a worm gear and a cam plate in order to keep the circuit engaged temporarily when the switch is turned off. The wiper system is driven by a permanent magnet–type motor. The windshield wiper motor is mounted on the bulkhead and is directly connected to the windshield wiper linkage.

The windshield wiper motor has two speeds, LO and HI, and also has intermittent wiper capability. The wiper switch is an integral part of the wiper/washer switch. Windshield wiper operation is actuated through the lever on the right side of the steering column.

WINDSHIELD WASHER SYSTEM

The windshield washer system is equipped with a washer fluid reservoir, a washer fluid pump, hoses, nozzles, and a wiper/washer switch. The windshield washer reservoir is mounted behind the front left wheel well splash shield. Attached to the reservoir is a washer pump, which pumps fluid through the hoses to the two nozzles mounted on the hood. The washer switch is an integral part of the wiper/washer switch. Windshield washer operation is actuated through the lever on the right side of the steering column.

REAR WINDOW WIPER/WASHER SYSTEM

The rear window wiper system consists of a wiper motor, a wiper arm, and a blade. The rear window wiper motor is located inside the hatchback/tailgate door and is directly connected to the rear window wiper. The rear window washer system is equipped with a separate washer fluid pump and hose. The hatchback has a hatch–mounted rear window washer nozzle and on the wagon, the washer nozzle is incorporated into the rear wiper motor. The rear window washer reservoir is mounted behind the front left wheel well splash shield. Attached to the reservoir is a washer pump, which pumps fluid through a hose to the rear washer nozzle.